# Side Decal Package Installation

**Installation Instructions Part Number**

26468085

To enable a successful installation of decals please refer to 52524.01V Accessory Decal Installation Tips and Tricks Video at https://www.centerlearning.com/HomePage/index.asp

**Note:** Once you are logged in, you can navigate to the 52524.01V Accessory Decal Installation Tips and Tricks Video in the Body and Paint Section of the Video Resource Library.

**Note:** Video is referenced from the GM Tech Tube in Center of Learning.

© 2025 General Motors. All rights reserved.

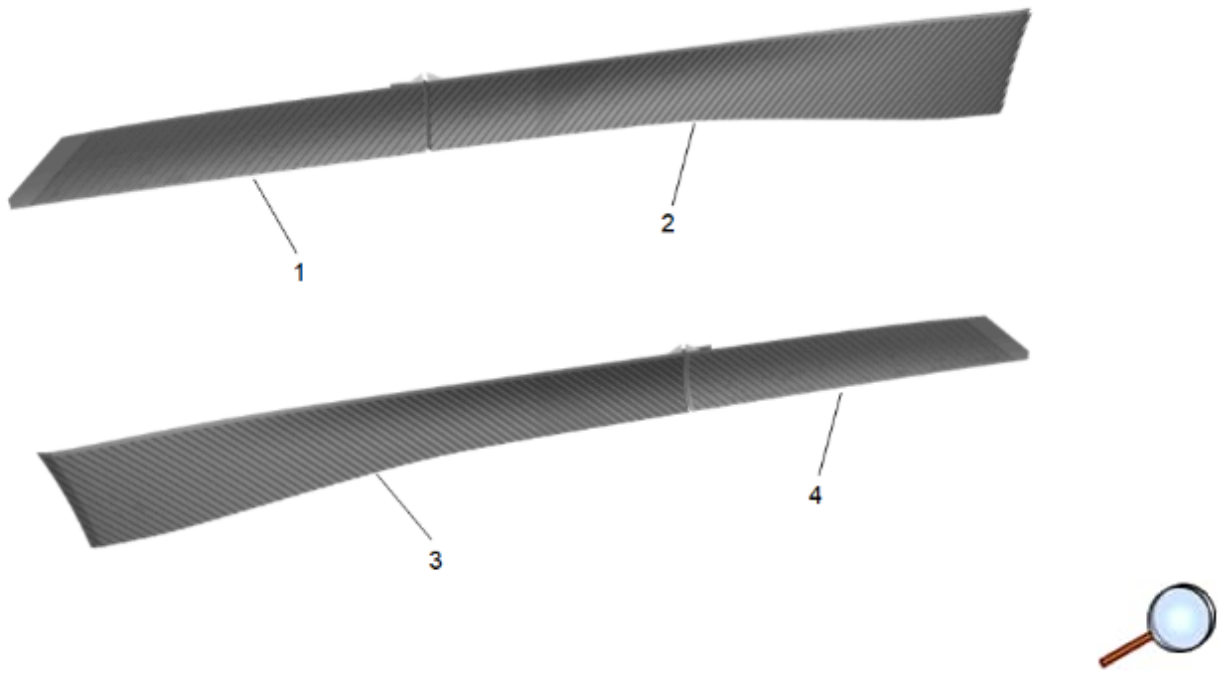


**Note:** Left side decals (1), (2) and right side decals (3), (4) are provided as one piece with a perforation that holds the two pieces together.

**Kit Contents**

| Item | Qty | Description |
|---|---|---|
| 1 | 1 | Decal-Front Door Left |
| 2 | 1 | Decal-Rear Door Left |
| 3 | 1 | Decal-Rear Door Right |
| 4 | 1 | Decal-Front Door Right |

| Item | Qty | Description |
|---|---|---|
| - | 1 | Plastic Squeegee |
| - | 1 | Installation Instructions |

**Tools Required**

- 70% Isopropyl Alcohol
- Lint-free cloth
- Sewing Needle or Thin Pin

  **Note:** Do NOT use a razor blade.
- Spray bottle that contains a surfactant (2-3 drops of unscented liquid detergent mixed with 24 oz. of water)

  **Note:** The decal needs to float on the painted surface for easy positioning, if the adhesive is sticking to the painted surface then add 1 or 2 more drops of soap to the spray bottle. Do NOT use Commercial premixed soap surfactant.
- Unscented Liquid Dish Soap
- Hair Dryer

© 2025 General Motors. All rights reserved.

**Important Considerations**

Attempting to install a decal dry (without the use of a surfactant) can result in bubbles that will be difficult to remove.

**Preparation - Before Installation**

1. After opening the kit, check to see if any parts are missing and that the product is not damaged.
2. This product should be installed with proper installation tools.
3. Install this product while observing all warnings and precautions stated in this instruction booklet.
4. **IMPORTANT: Begin with a thoroughly washed vehicle.**
5. Ambient temperature of decals and vehicle must be 70°F / 21°C to 90°F /32°C at the time of installation and for a minimum of 30 minutes and up to two hours after.
6. Thoroughly clean vehicle surface with 70% isopropyl alcohol and follow with a lint-free cloth.
7. To ensure bubble-free application, put 2 or 3 tiny drops of liquid detergent into a 24 oz. / 750 ml trigger-type spray bottle and fill with water. Replace the top and shake to mix the soap and water "surfactant." Set nozzle for a fine mist.

   **Note:** It is strongly recommended not to use professional premixed surfactant, but to mix your own soap and water surfactant to control the how the part floats on the panel for positioning before activating the adhesion with the squeegee.

   **Note:** See "Accessory Decal Installation Tips and Tricks" video for demonstration.

   **Note:** Only use supplied plastic squeegee to work the decals. Using the incorrect squeegee will damage the decals.

**Installation Notes**

1. Install decals in a clean, dust free environment.
2. All of the decals include premask carrier extensions and notches that allow the installer to accurately align the decal to the body panel.
3. The soap / water "surfactant" is intended to allow the installer the opportunity to position the decal before any pre-adhesion can occur. If the decal sticks prematurely and does not easily "glide" across the surface of a body panel, increase the amount of surfactant that has been applied to the body panel and/or place additional soap into the spray bottle and re-spray.

4. The adhesive is activated by pressure. Be sure to use firm, overlapping strokes, beginning at the center of the decal and working toward the edges of the decal.

   **Note:** Squeegee shown in pictures has a protective cloth attached to the squeegee. Installer must use a lint- free towel to cover edge of squeegee to prevent damage to decal once the premask is removed.
5. When using the squeegee, be careful not to drag the squeegee onto the painted body panel.
6. After premask removal, never use an uncovered squeegee to re-press a decal into place. Wrap the squeegee with a lint-free towel and re-spray the decal with surfactant before applying additional pressure.
7. The decals have a paper-premask carrier. Should this carrier be difficult to remove, spray the carrier paper with the surfactant and wait 10 seconds for the carrier to soften and release from the decal.
8. If bubbles are present after premask carrier removal, wrap a towel around the squeegee and carefully attempt to push bubble to the side of the decal. If the bubble cannot be moved, use a sewing needle to pierce the bubble and press the remaining solution from beneath the decal.

   **Note:** The pin must be inserted in the side of the bubble, not the top to prevent the pin from breaking the paint and cause corrosion.

   **Note:** See "Accessory Decal Installation Tips and Tricks" video for demonstration.

   **Note:** After a decal installation has been completed, do not high pressure wash the vehicle for 72 hours.

© 2025 General Motors. All rights reserved.

## Installation Procedure

**Front Door Decal**

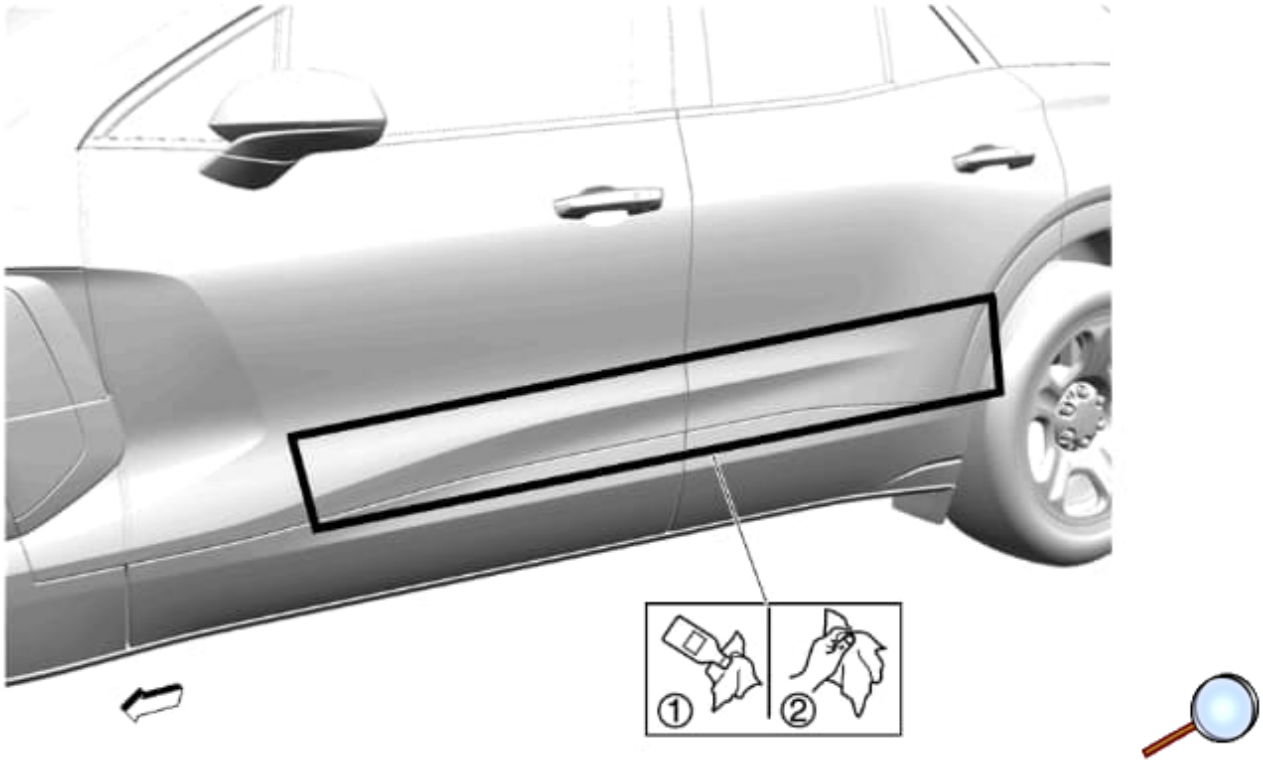


1. Clean the surface area where the decals will be applied with isopropyl alcohol and dry surface with a clean towel.

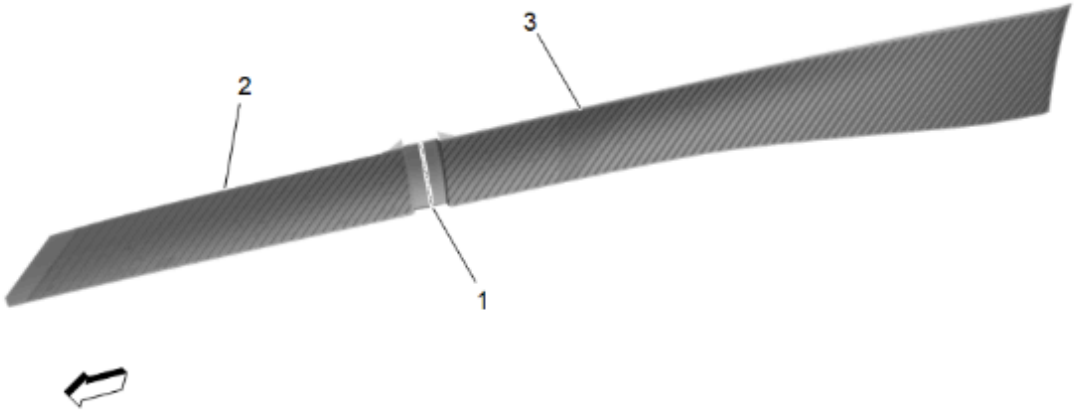


**Note:** LH side shown, RH side similar.

2. At the center perforation (1), carefully separate the front door decal portion (2) from the rear door decal portion (3).

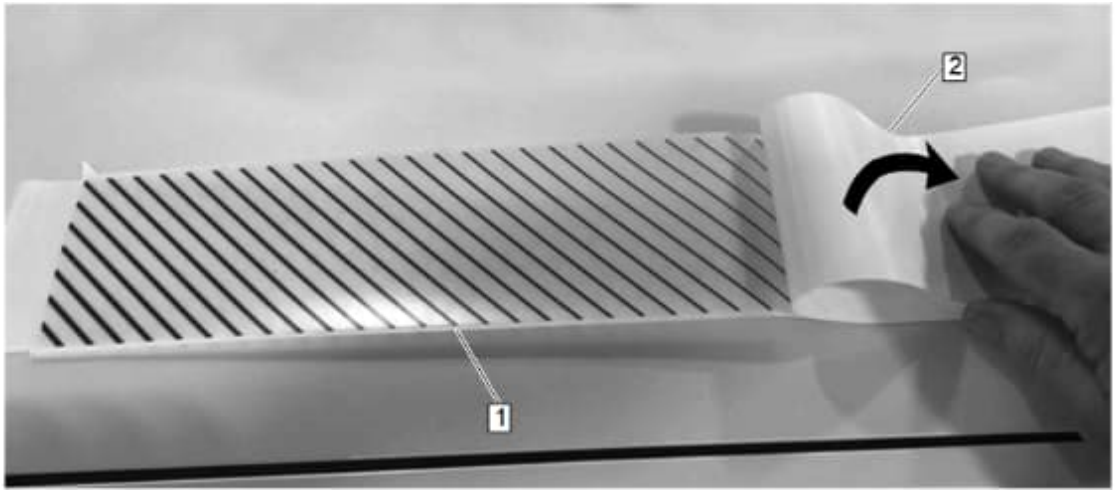


3. Place the front decal face-down on a flat surface and slowly remove the release liner (2) (the adhesive (1) will now be exposed).

© 2025 General Motors. All rights reserved.

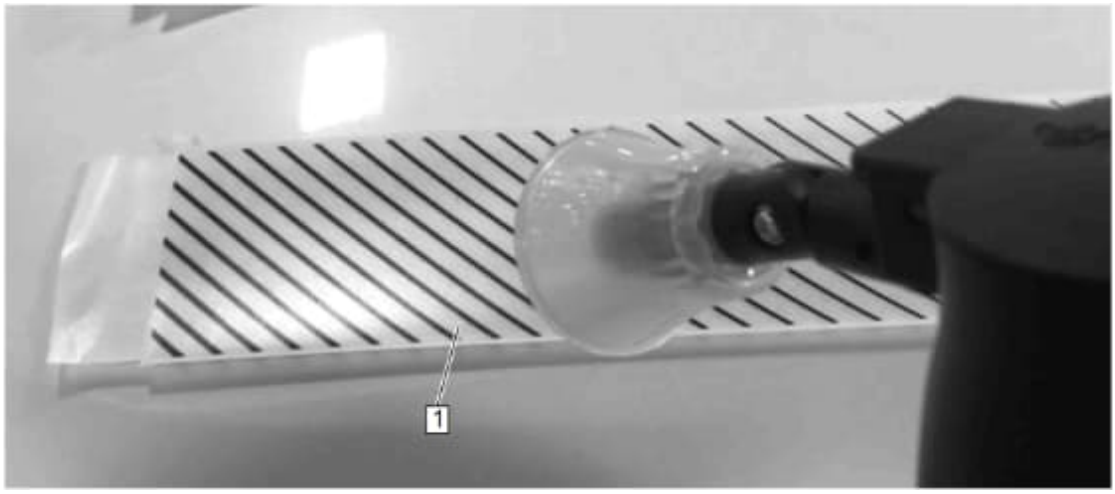


4. Use the wetting solution to saturate the exposed adhesive side of the left front decal (1).

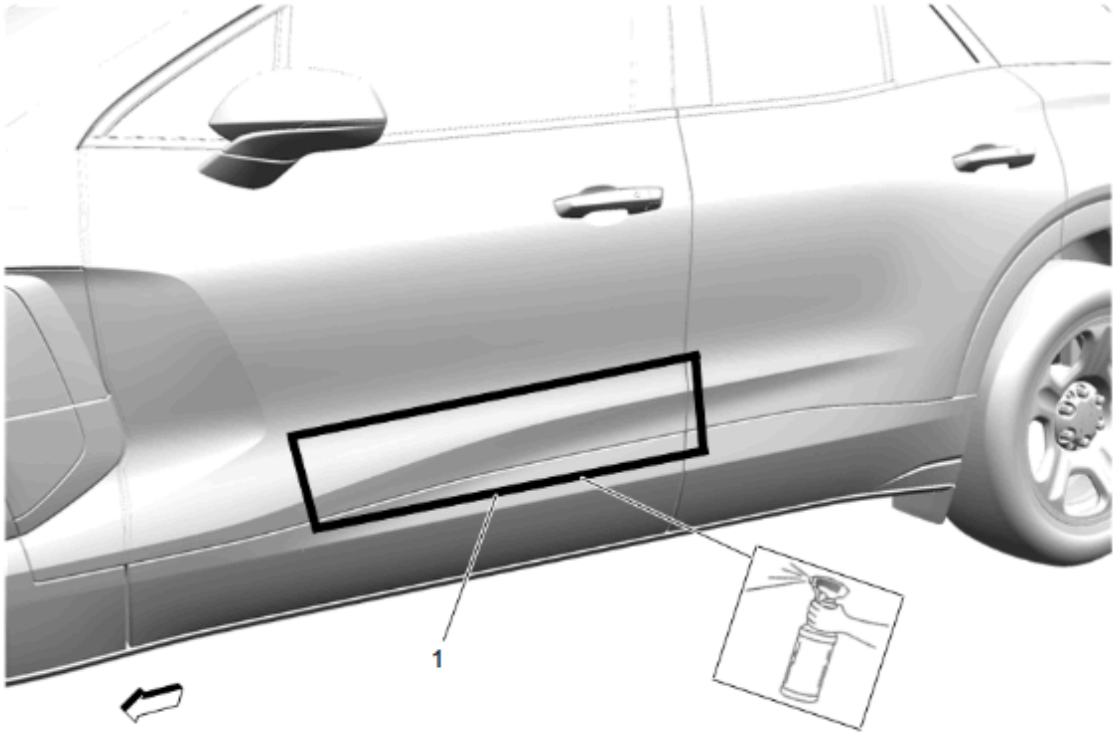


5. Using the wetting solution in the spray bottle, set the nozzle to a fine mist and saturate the front door area (1).

© 2025 General Motors. All rights reserved.

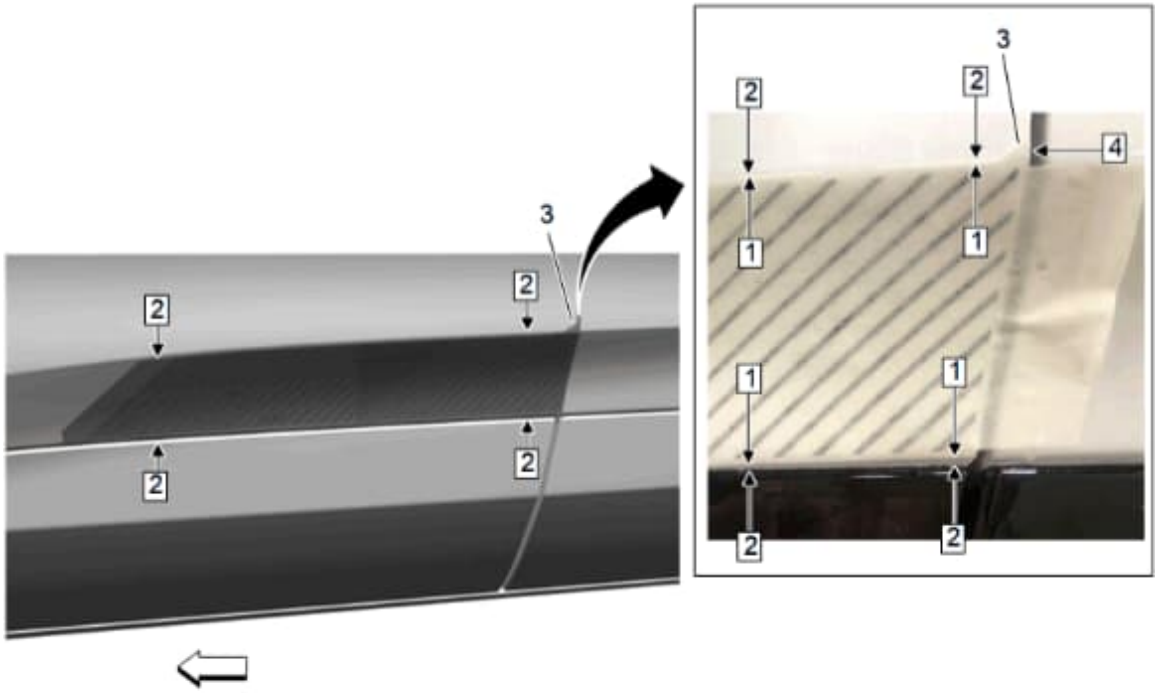


6. Align the premask carrier edges (1) to the upper and lower feature lines (2) while aligning the upper rear notch (3) to the rear edge (4) of the front door panel.

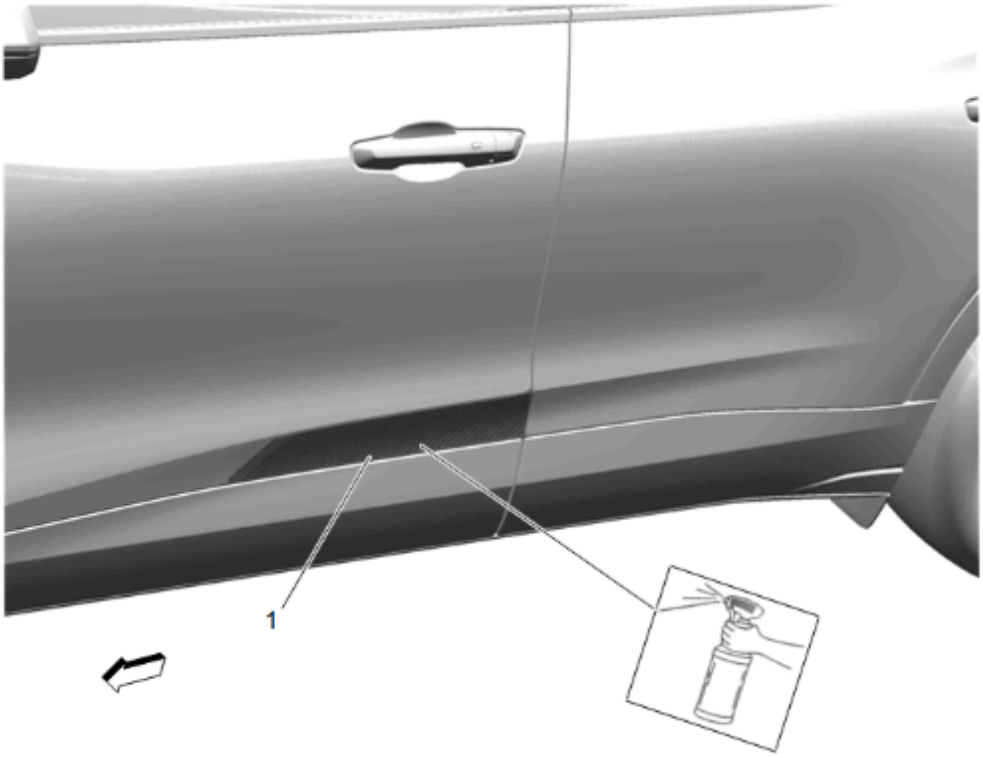


7. Spray the premask (1) with surfactant.

© 2025 General Motors. All rights reserved.

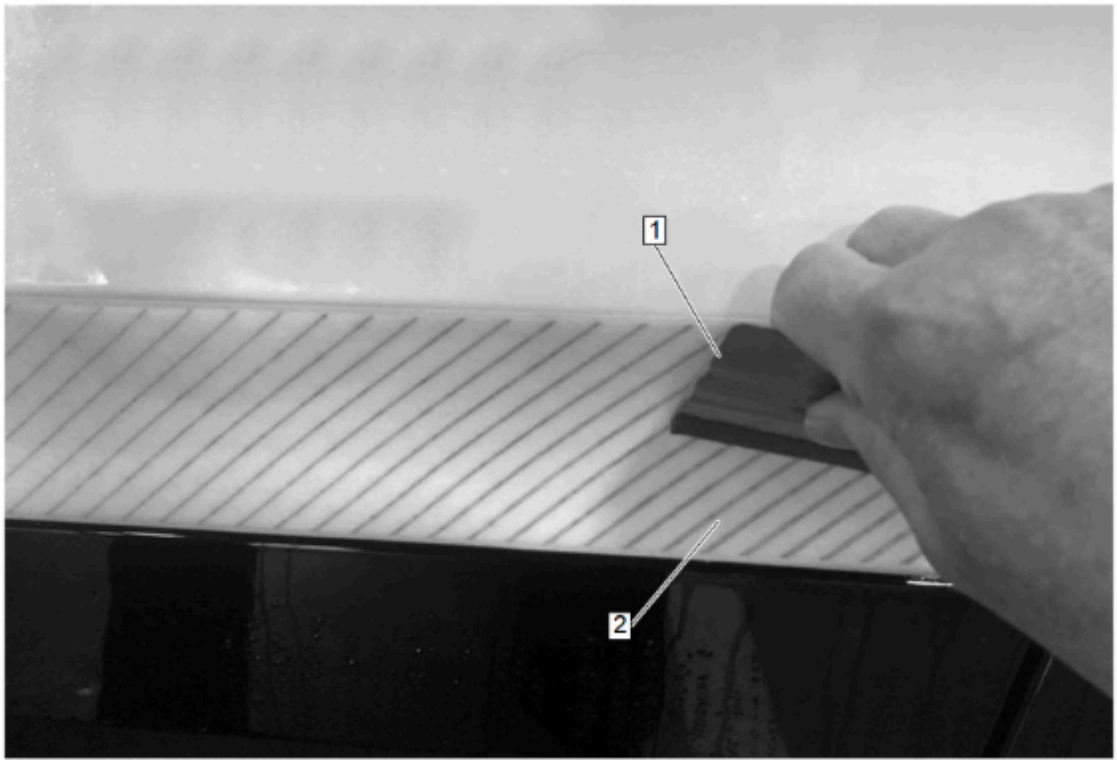


8. Using a plastic squeegee (1), press the decal (2) into place and wet out.
9. Inspect and wet out any visible bubbles that are remaining before removal of the premask carrier.

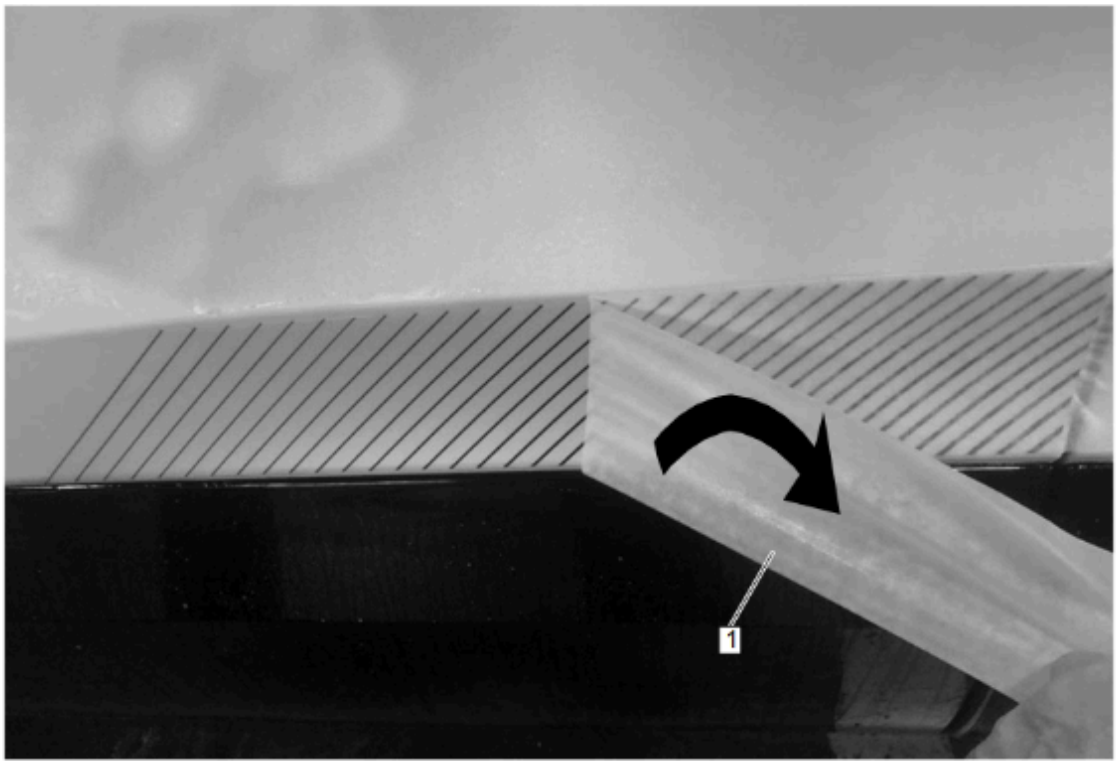


10. Carefully remove the premask (1) at 180 degrees i.e. parallel to the vehicle surface.

© 2025 General Motors. All rights reserved.

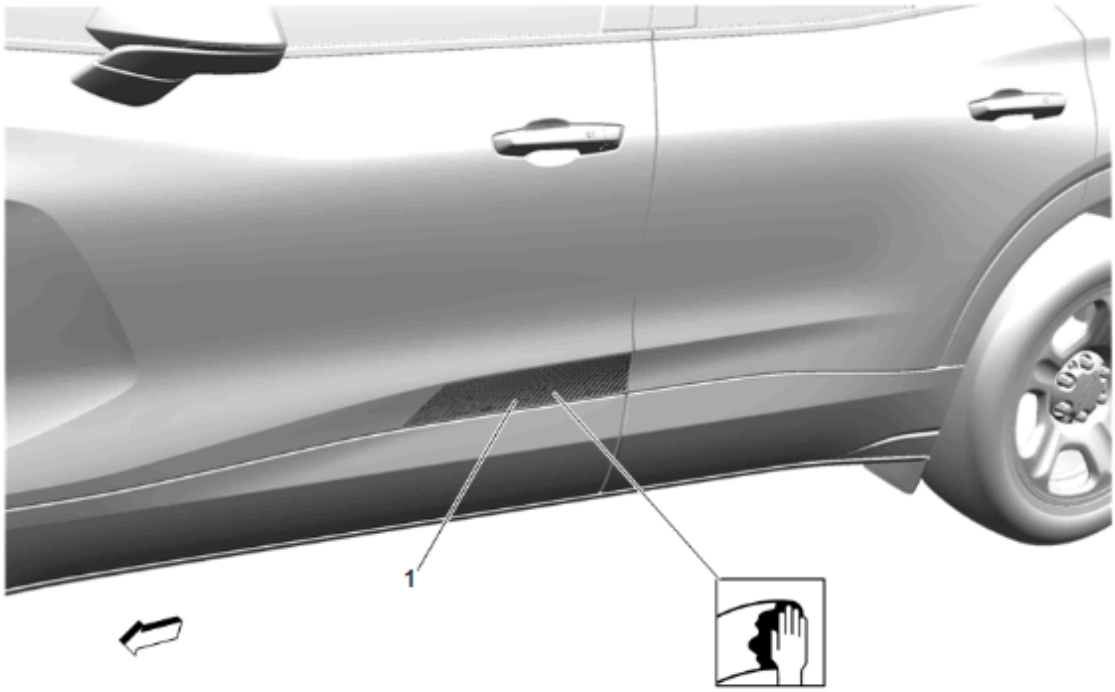


11. After premask removal, NEVER use an uncovered squeegee to re-press a decal (1) into place. Use a towel to remove any remaining soap and water.
12. If there are any large bubbles or areas of lifting, wrap the squeegee with a lint free towel, re-spray decal (1) with surfactant and re-press decal into place.

    **Note:** The pin must be inserted in the side of the bubble, not the top to prevent the pin from breaking the paint and cause corrosion. See "Accessory Decal Installation Tips and Tricks" video for demonstration.

    **Note:** After a decal installation has been complete, do not high pressure wash the vehicle for 72 hours.
13. Decal installation complete (1), LH shown (RH opposite).

**Rear Door Decal**

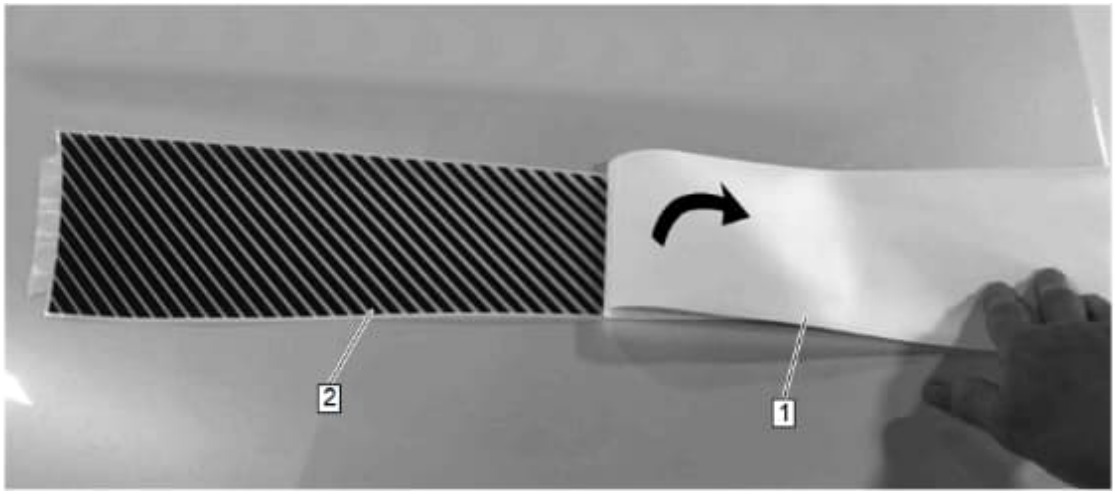


**Note:** LH side shown, RH side similar.

1. Place the rear decal face-down on a flat surface and slowly remove the release liner (1) (the adhesive (2) will now be exposed).

© 2025 General Motors. All rights reserved.

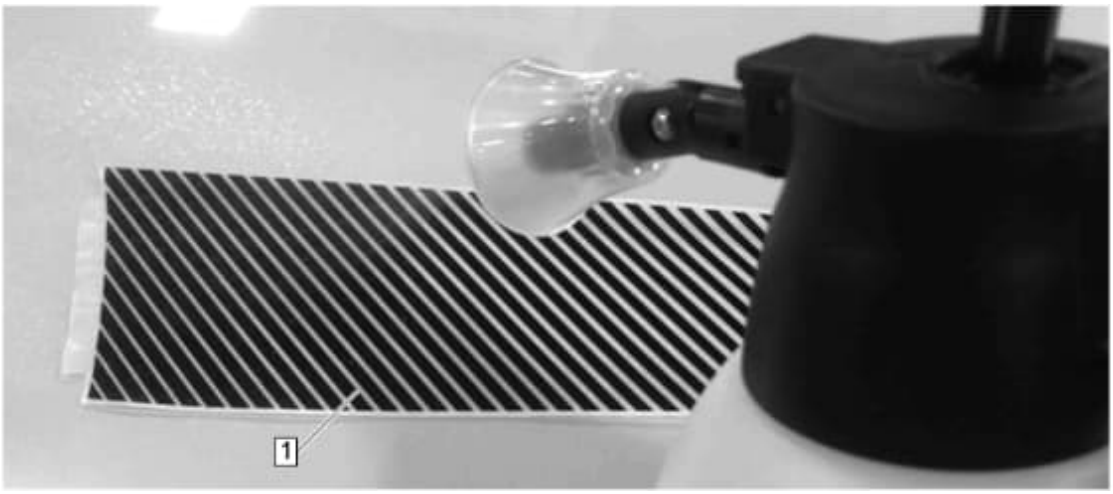


2. Use the wetting solution to saturate the exposed adhesive side of the left rear decal (1).

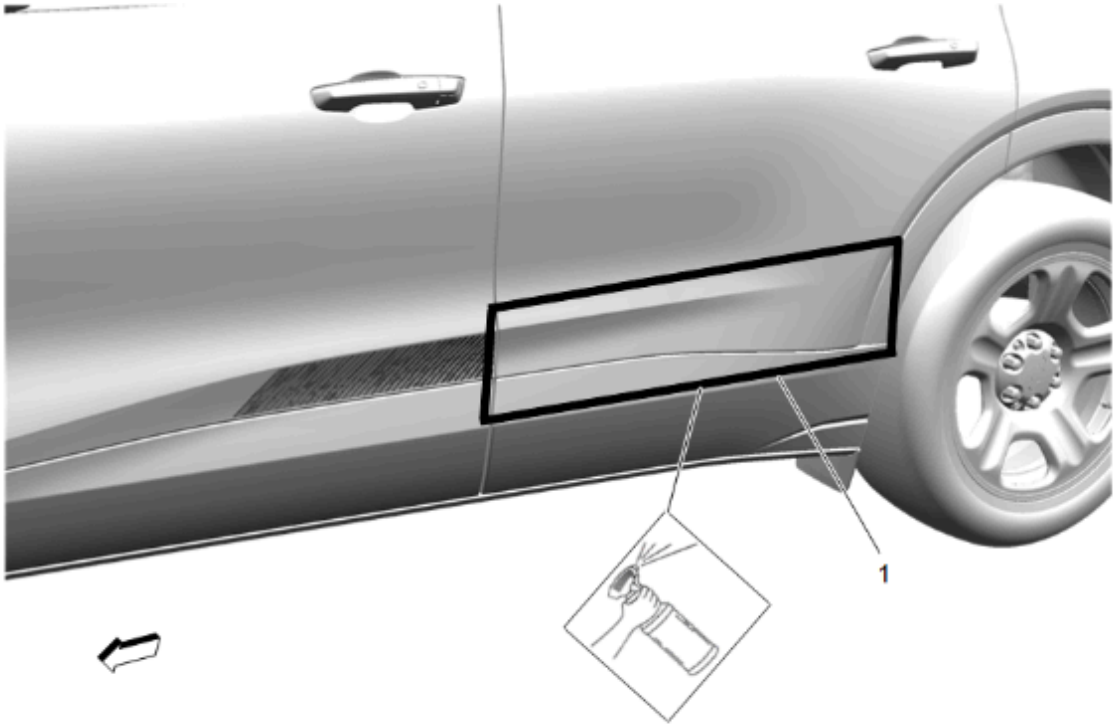


3. Using the wetting solution in the spray bottle, set the nozzle to a fine mist and saturate the rear door area (1).

© 2025 General Motors. All rights reserved.

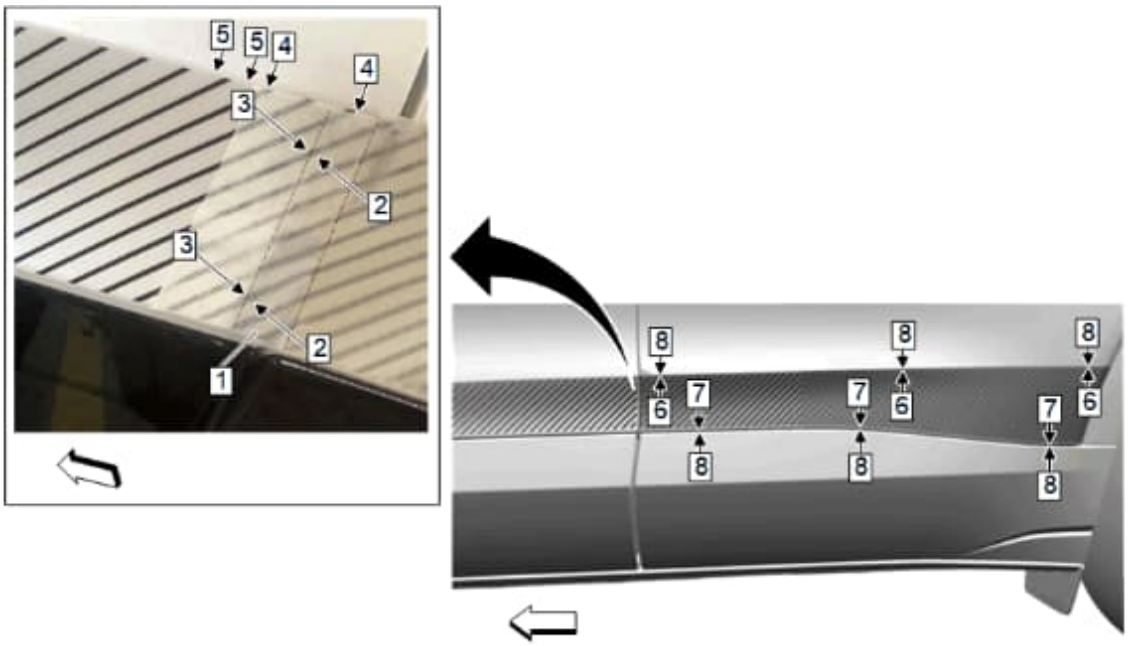


4. Align the lines (2) in the premask front tab (1) to the lines (3) in the installed front door decal.
5. Align the top edge of the premask carrier (4) to the top edge of the installed front door decal (5).
6. Align the top and bottom edges of the premask carrier (6) and (7) to the feature lines (8).

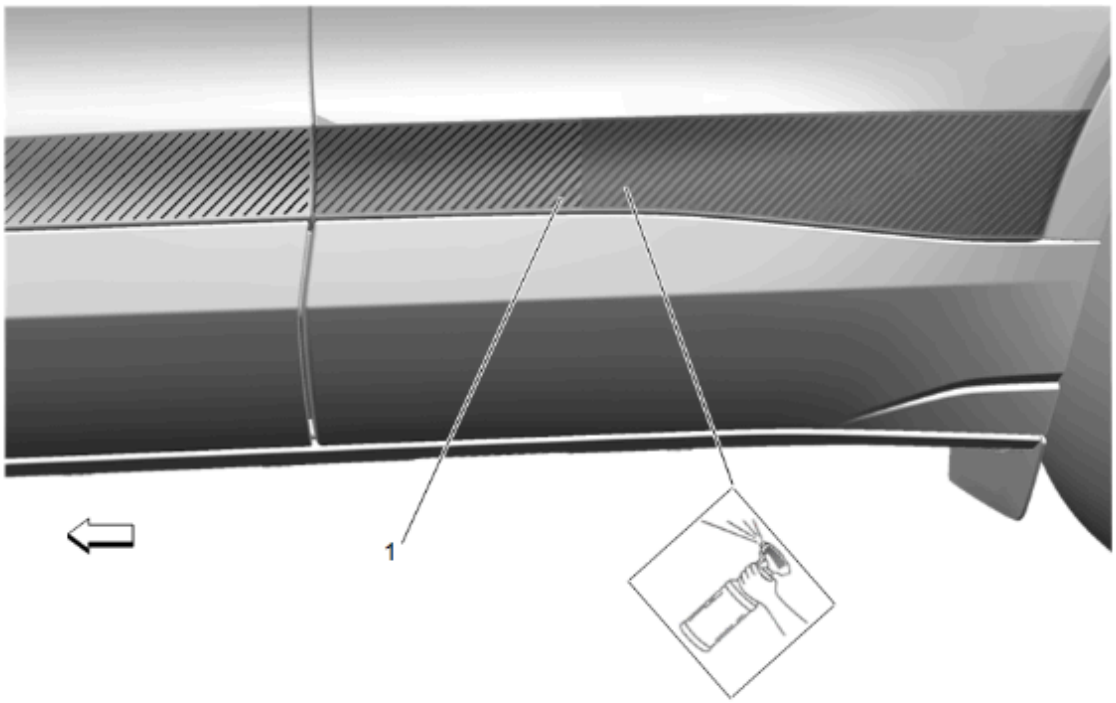


7. Spray the premask (1) with surfactant.

© 2025 General Motors. All rights reserved.

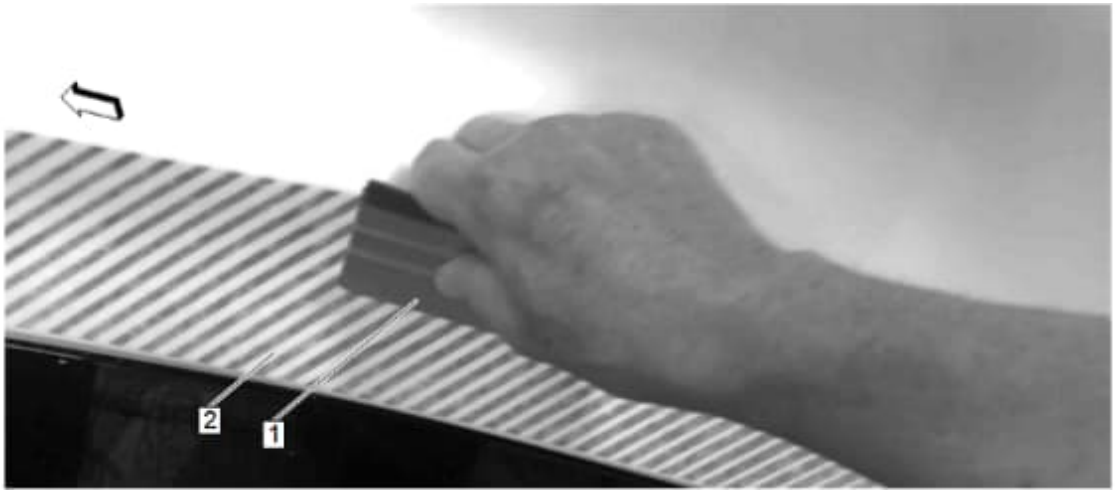


8. Using a plastic squeegee (1), press the decal (2) into place and wet out.
9. Inspect and wet out any visible bubbles that are remaining before removal of the premask carrier.

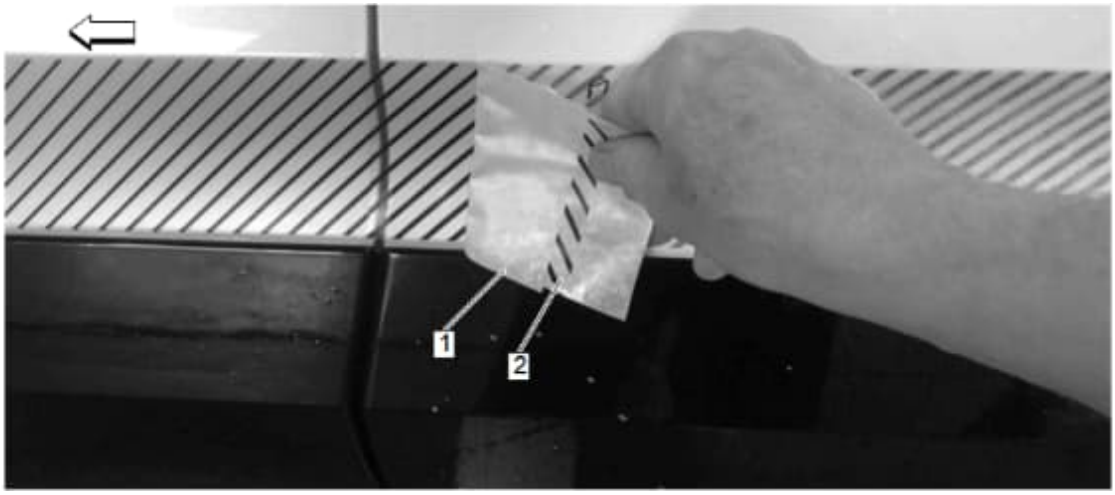


10. Carefully remove the premask (1) carrier, including the alignment tab (2) at 180 degrees i.e. parallel to the vehicle surface.

© 2025 General Motors. All rights reserved.

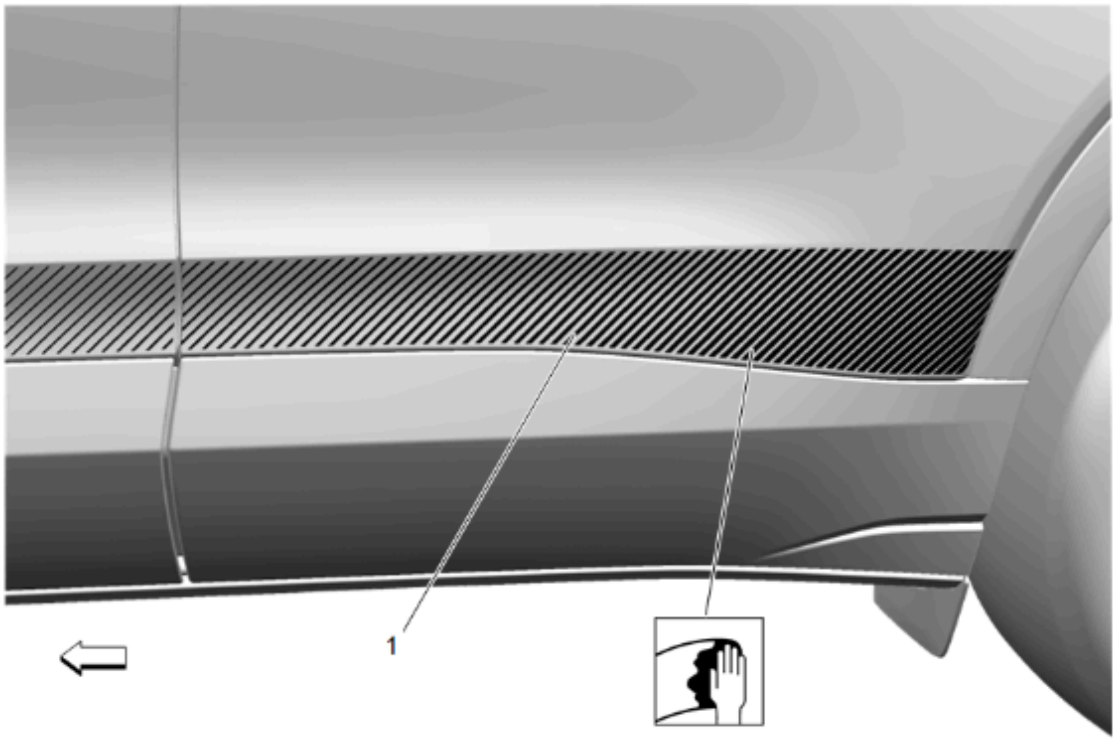


11. After premask removal, NEVER use an uncovered squeegee to re-press a decal (1) into place. Use a towel to remove any remaining soap and water.
12. If there are any large bubbles or areas of lifting, wrap the squeegee with a lint free towel, re-spray decal (1) with surfactant and re-press decal into place.

    **Note:** The pin must be inserted in the side of the bubble, not the top to prevent the pin from breaking the paint and cause corrosion. See "Accessory Decal Installation Tips and Tricks" video for demonstration.

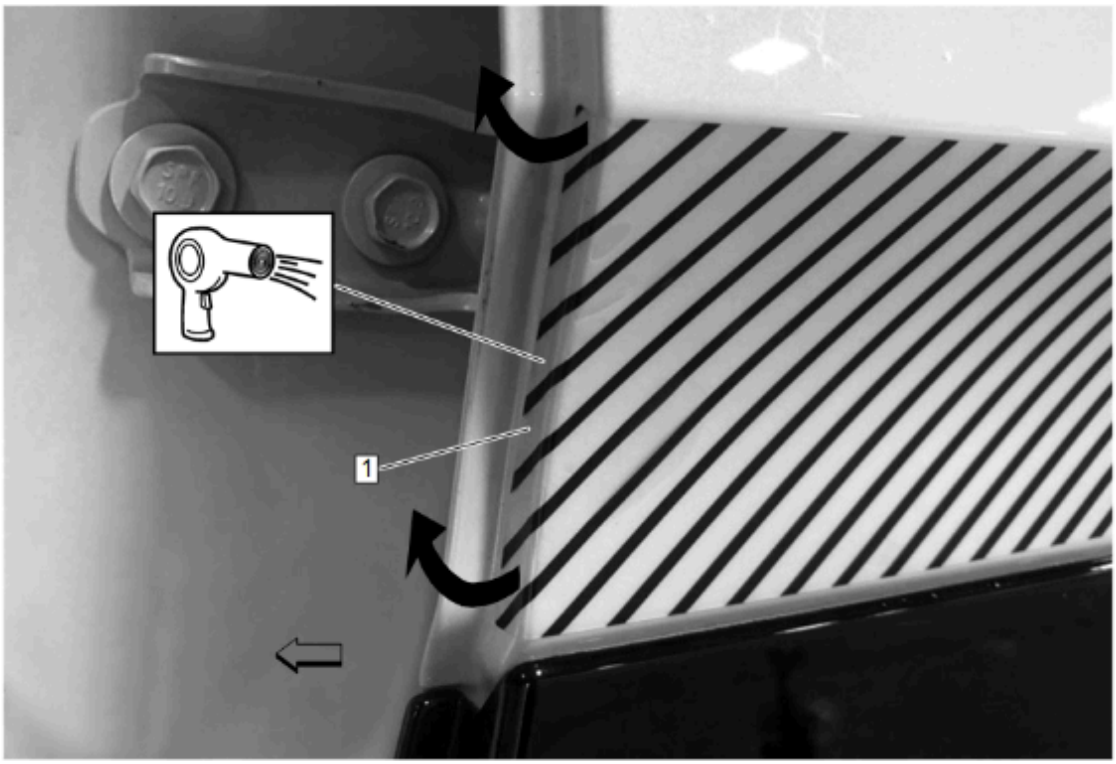


13. Carefully open the front door to access the front inner edge of rear door.

© 2025 General Motors. All rights reserved.

**Caution:** Use extreme care when using a hair dryer! DO NOT get too close to decal or heat too quickly as it will damage the decal. Apply heat evenly across the decal edge.

**Note:** Make sure to cover squeegee with a lint free towel at all times prior to pressing decal into place.

14. Use a hair dryer to warm the portion of the decal (1) extends beyond the panel edge and then press around onto the inner edge of the panel and then re-press into place.

**Note:** After a decal installation has been complete, do not high pressure wash the vehicle for 72 hours.

15. Decal installation complete, LH shown (RH opposite).

© 2025 General Motors. All rights reserved.