Front Side Door Sill Trim Plate Package Installation

Installation Instructions Part Number

85163975

Note: Please review the entire procedure before trying to perform it.

Kit Contents

Qty	Description
2	Front Illuminated Sill Plate Assembly
1	Wiring Harness Pkg: (Contains Harness ASM (qty 1), Abrasive Tape (qty 8) , Foam tape (qty 2), Wire Tie Strap (qty 8)
1	Installation Instructions

Recommended Tools

- Flat Bladed Plastic Trim Tool
- GM Terminal Remover Tool P/N 12152110, 15315247, or 12094429 (7J04899)
- Push-in Retainer Puller
- Electrical Tape
- 10mm Socket
- Trim Removal Tools
- Small Ratchet
- Wire Puller
- Heat Gun
- Wire Crimp Tool
- Magnet and / or Vacuum
- Weather Strip Roller Tool
- Masking Tape

Procedure

1. Open front doors.

© 2025 General Motors. All rights reserved.

2. Move the front seats to the furthest rearward position.

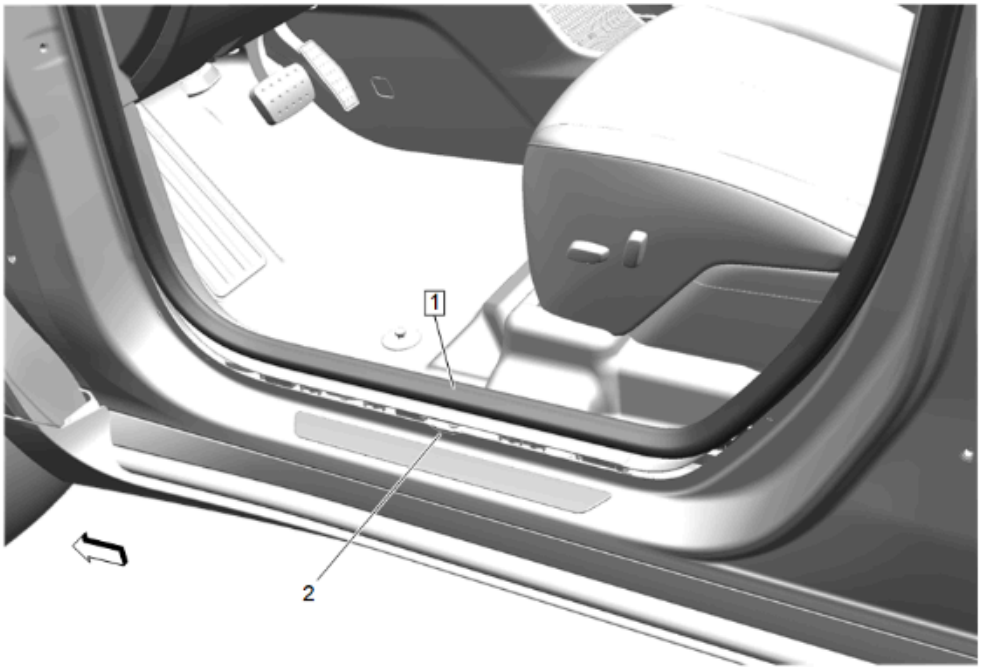

3. Lift up and reposition the front door weather strip (1) until the notch (2) on rocker panel is exposed. Repeat for opposite side.
4. Remove the left and right front side door sill garnish molding . Refer to Front Side Door Sill Garnish Molding Replacement in Vehicle Service Manual.

© 2025 General Motors. All rights reserved.

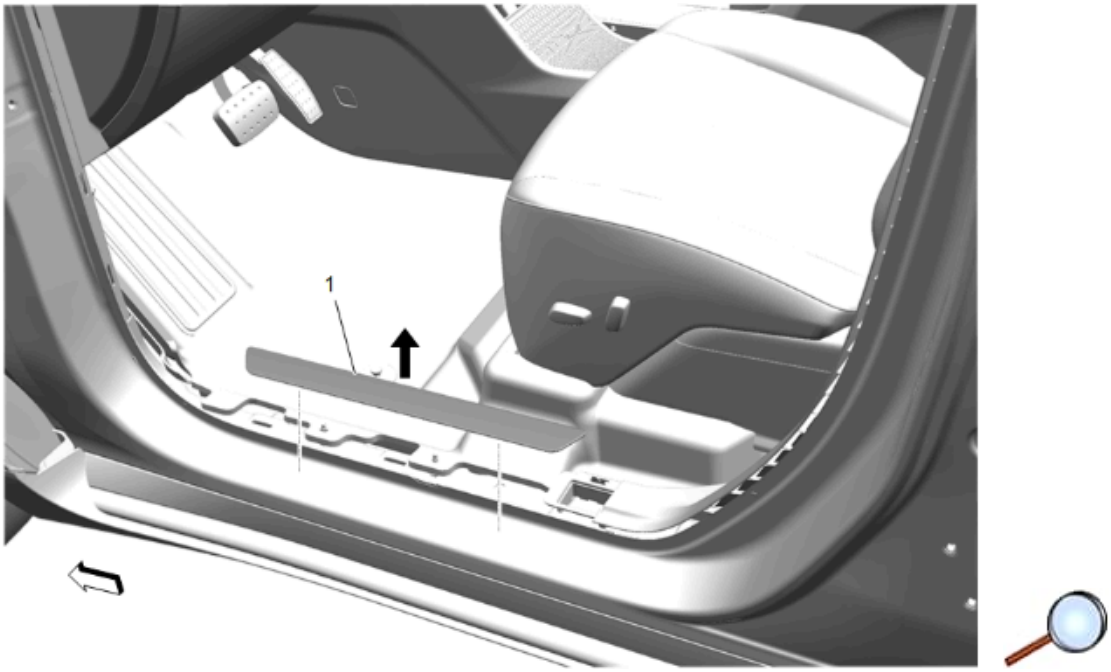

5. Using a plastic trim tool or equivalent, carefully remove the production sill plates (1), if present. Use an approved adhesive remover to remove any adhesive residue. Repeat for opposite side.
6. Remove the left and right front floor console extension panels. Refer to Front Floor Console Extension Panel Replacement in Vehicle Service Manual.

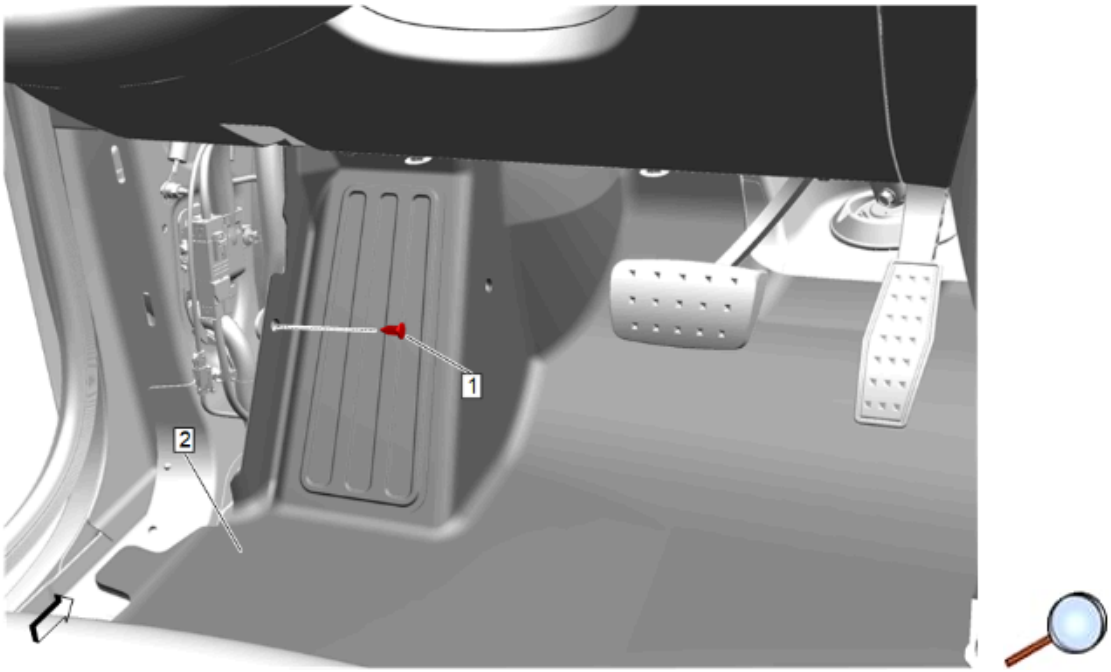

7. Remove the carpet retainer (1) on the driver side.
8. Remove front floor mats and reposition front carpet as necessary.

© 2025 General Motors. All rights reserved.

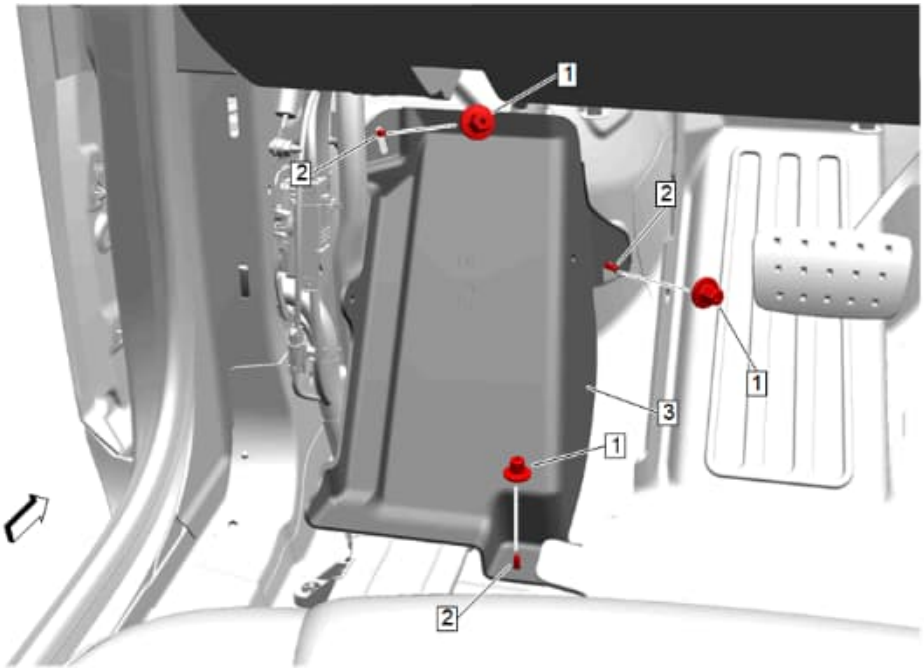

9. Reposition the driver side carpet to expose carpet bracket (3). Remove retainers (1) from studs (2) and remove carpet bracket (3).

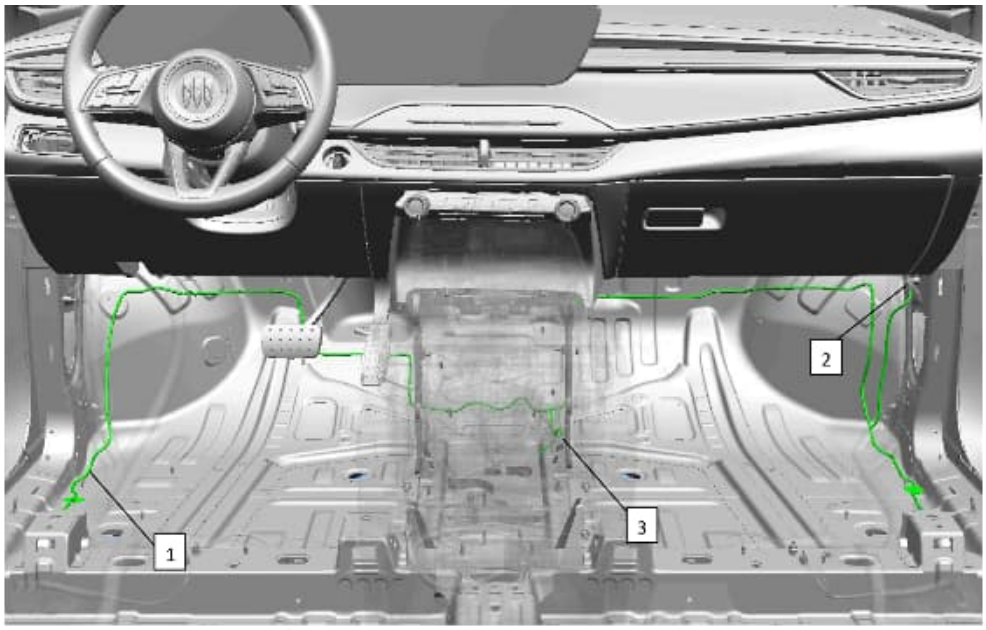

10. Route wiring harness through the vehicle as shown.
    10.1. Begin by spreading out the harness to understand how it is routed through the vehicle. The harness will route from the driver side, to the passenger side, near the top edge of the carpet. The ground eyelet (2) attaches in the passenger side cowl and the two loose wires (3) attach to the BCM under the floor console on the passenger side.
    10.2. Route the harness (1) loosely across the bottom of floor console with the BCM connections on passenger side under floor console, and ground (2) on the right side.

© 2025 General Motors. All rights reserved.

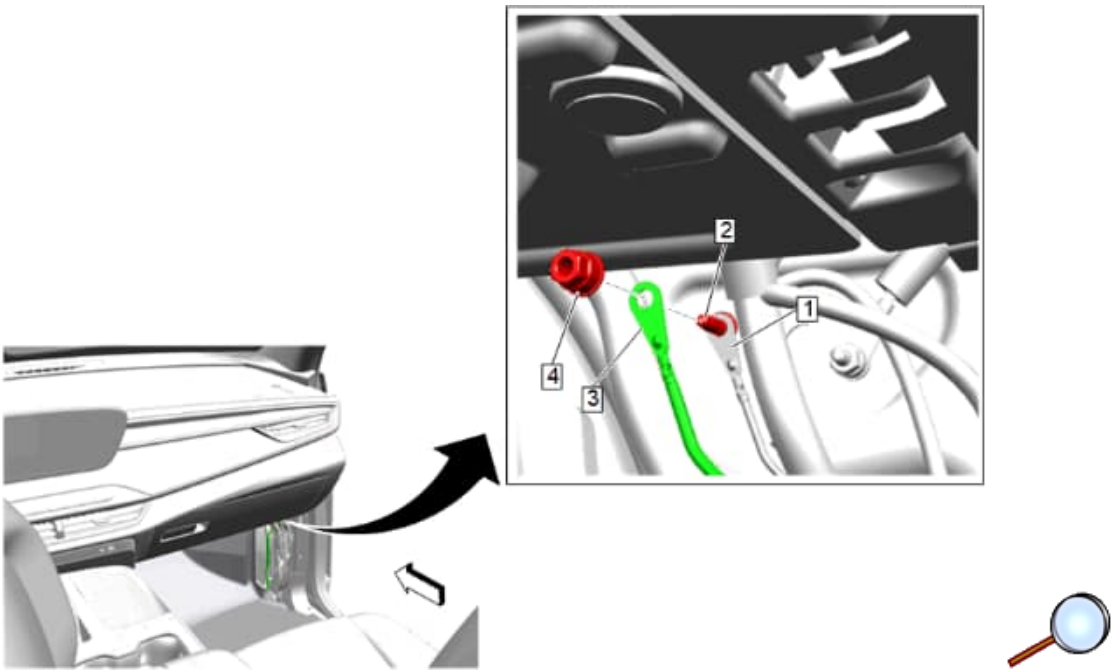

11. Locate an unused ground stud (1) on the passenger side cowl. If no unused ground stud is available, choose the stud with only one eyelet.
12. Remove the ground nut (4) and install the illuminated sill plate harness ground eyelet (3) to the existing ground stud (2) and eyelet (3).

    Caution: Use the correct fastener in the correct location. Replacement fasteners must be the correct part number for that application. Fasteners requiring replacement or fasteners requiring the use of thread locking compound or sealant are identified in the service procedure. Do not use paints, lubricants, or corrosion inhibitors on fasteners or fastener joint surfaces unless specified. These coatings affect fastener torque and joint clamping force and may damage the fastener. Use the correct tightening sequence and specifications when installing fasteners in order to avoid damage to parts and systems.
13. Reinstall the ground nut (1) and tighten to 25 N.m (18 lb in).

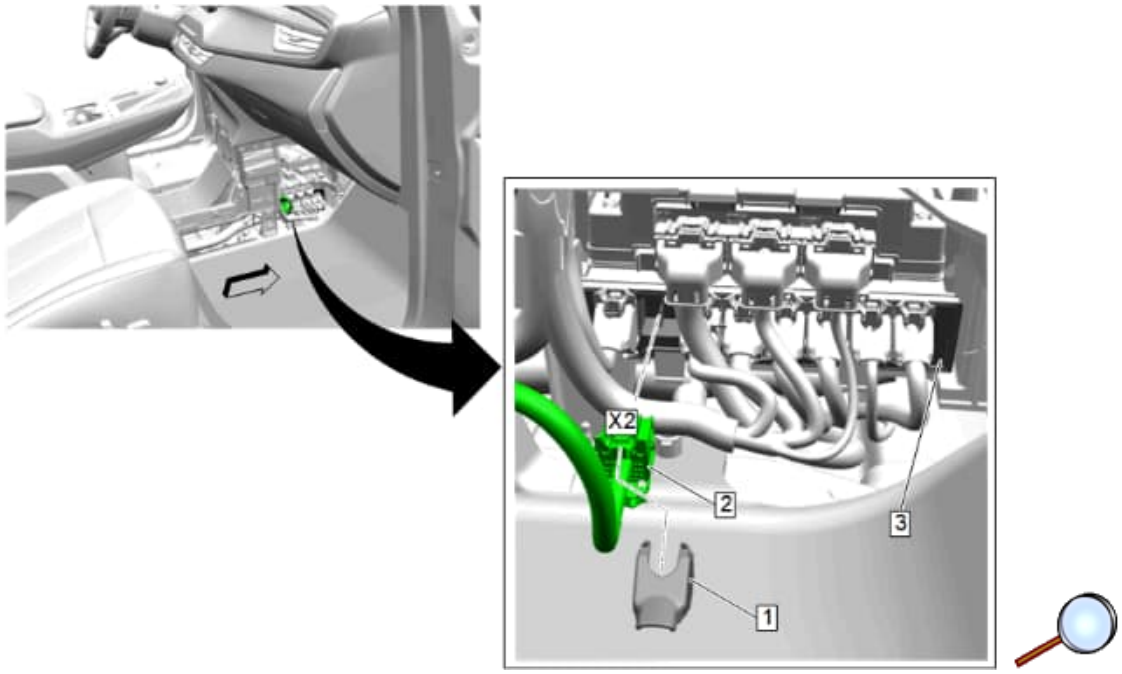

14. Locate the BCM (3) on the passenger side of the vehicle, under the floor console. Locate connector X2 and remove cover (1) from connector. Disconnect BCM connector X2 (2).

© 2025 General Motors. All rights reserved.

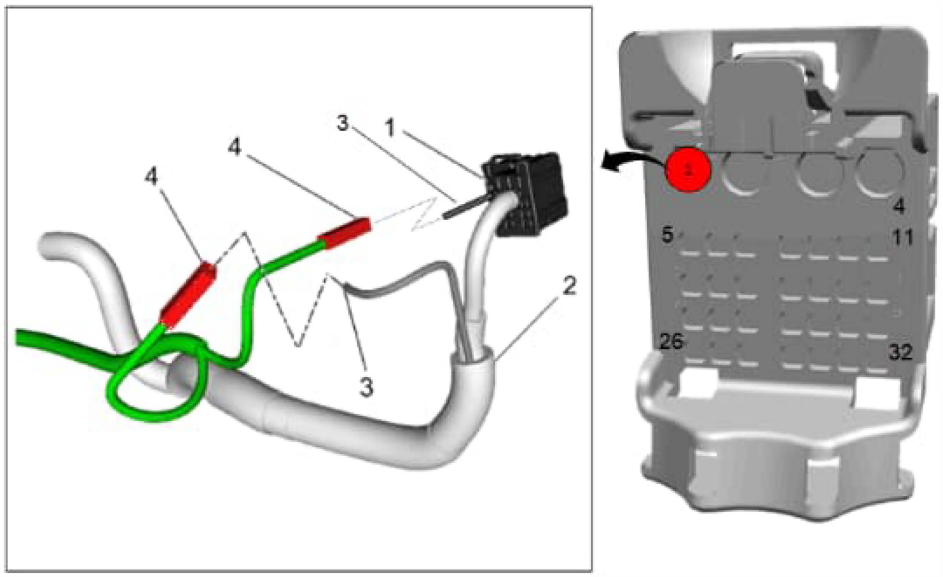

Important: DO NOT remove the terminal from connector.

15. Locate cavity #1 on the removed connector (1). Remove wire harness covering (2) starting from connector for approximately 4".
16. Gently separate the grey wire (3) leading to cavity #1 from the rest of wire bundle.
17. Approximately 50 mm from the rear of the connector cut the grey wire (3) leading to cavity #1.

    Note: There is no specific orientation on the supplied harness (4) which needs to be connected to the cut wire (3).
18. On the supplied wire harness locate 2 blunt cut with crimp barrel ends. Refer to Wire to Wire Repair in Vehicle Service Manual. Splice the previously cut wire by inserting into the crimp barrel (4).
19. Seal splices and re-tape harness to within 25 mm of rear of connector.
20. Re-connect connector X2 to the BCM).
21. Reinstall cover to connector X2.

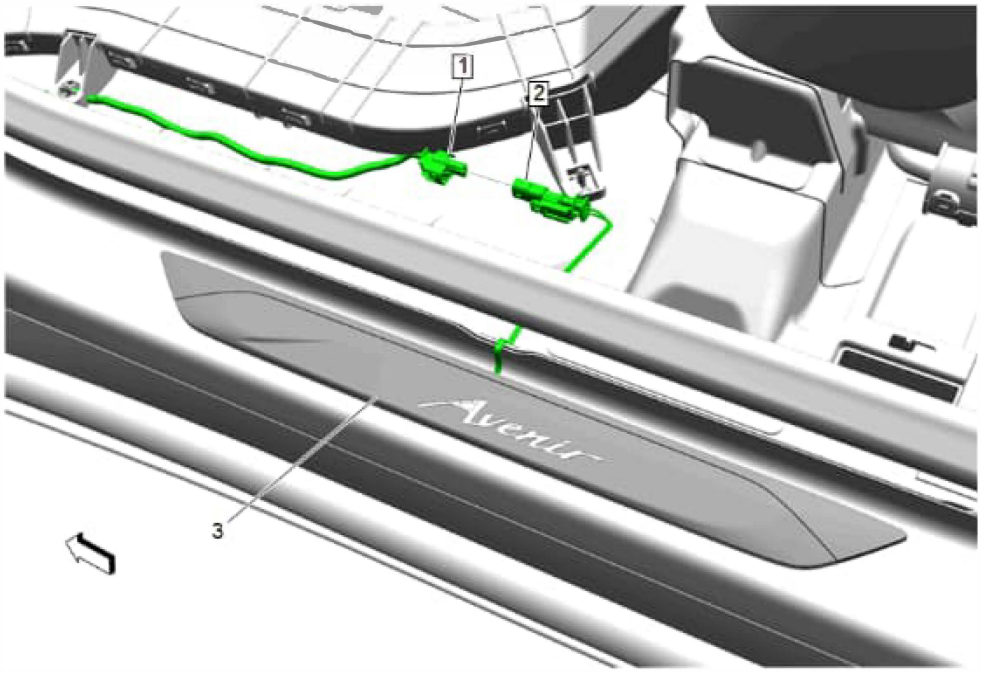

22. Plug in the electrical connector (2) of the illuminated sill garnish molding (3) to the illuminated sill wire harness (1). Do not fully install the illuminated sill garnish molding at this time.

© 2025 General Motors. All rights reserved.

Check Operation of the Illuminated Sill Plates

22.1. Verify all disconnected electrical connections are re-connected.

22.2. Close all doors

22.3. Open each door, door garnish molding will illuminate when dome light illuminates.

22.4. The door sill plates should light up and go out with dome lamp (make sure dome lamp is on).

22.5. If the sill plates do not light up, check the ground and BCM splice as well as other connections at illuminated door sills, (make sure dome lamp switch is not in defeat position).

22.6. Check to see if the courtesy lights are working.

22.7. Verify that the illuminated sill plates are operating correctly.

Fully Install Illuminated Sill Plates

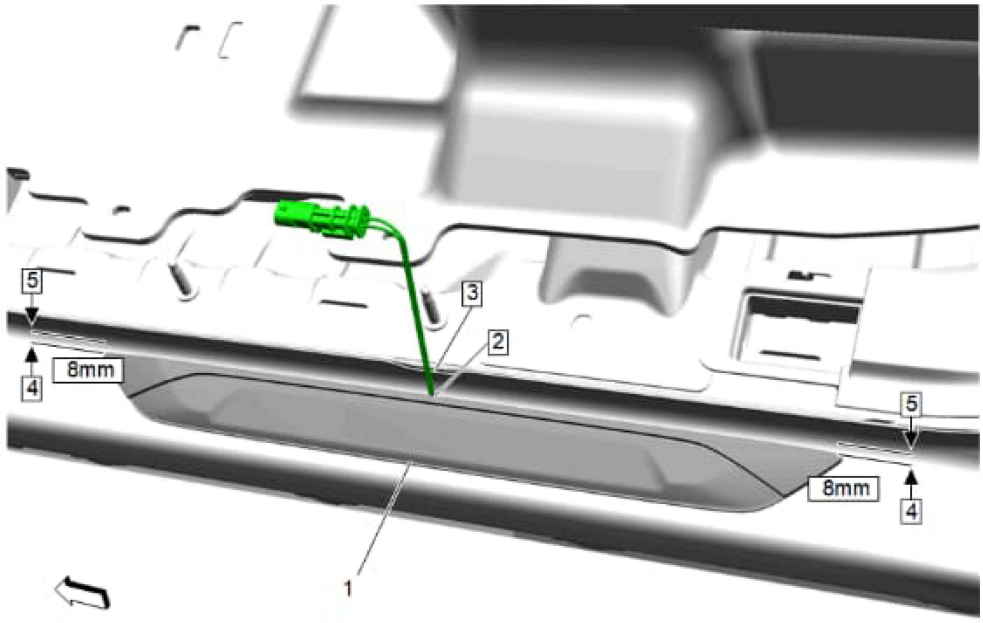

© 2025 General Motors. All rights reserved.

Note: The illuminated sill plates can be installed on either side of the vehicle.

1. Remove the adhesive tape liner from the back of illuminated sill plate (1). Align the harness at the center of sill plate (2) with the notch (3) on the rocker panel, while positioning the sill plate top edge (4) 8mm from the inner edge (5) of rocker panel. and firmly press into place until the sill plate is fully seated.

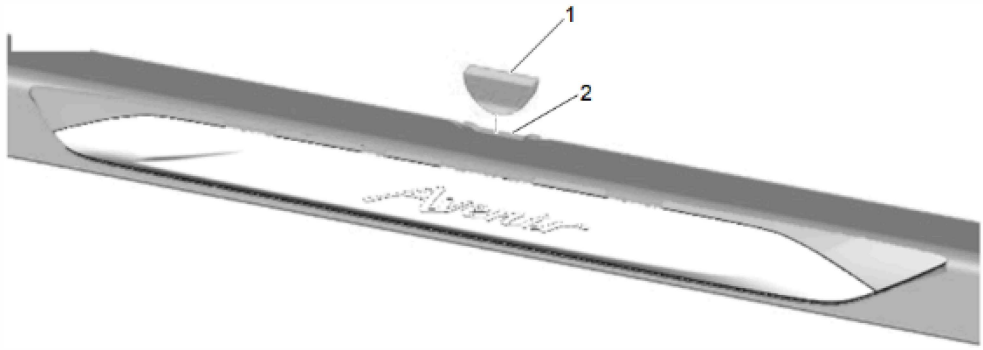

2. Place one abrasive tape (1) on the notch (2).

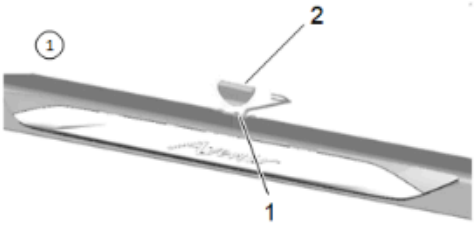

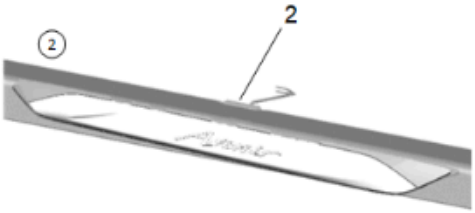

3. Route the pigtail wiring (1) across the notch of the rocker.
4. Use one abrasive tape (2) to keep pigtail wiring secure.
5. Repeat for the second illuminated sill plate on the opposite side of the vehicle.

Complete the Wire Harness Routing

© 2025 General Motors. All rights reserved.

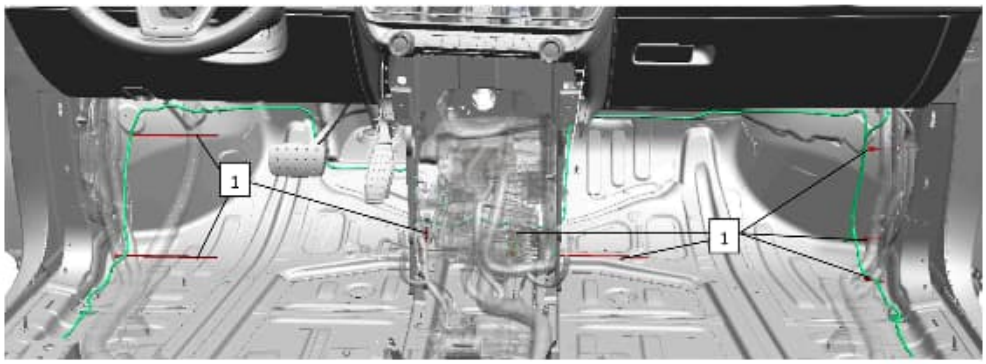

1. Use supplied tie straps (1) to secure harness and from being seen, trim excess off tie straps. Be sure to secure harness away from the accelerator pedal.

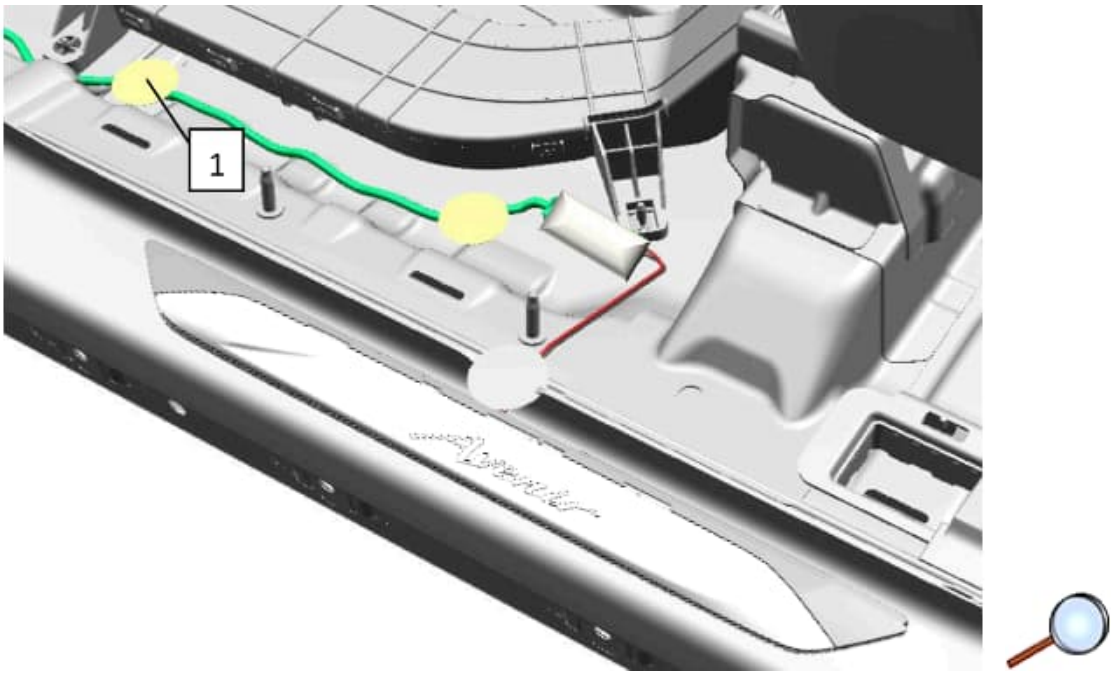

2. Use foam tape, as required, to keep wire harness connector from making noise.
3. Use Abrasive tape (1), as required, to keep connector secure and from being seen.

© 2025 General Motors. All rights reserved.

Re-install Carpet and Trim

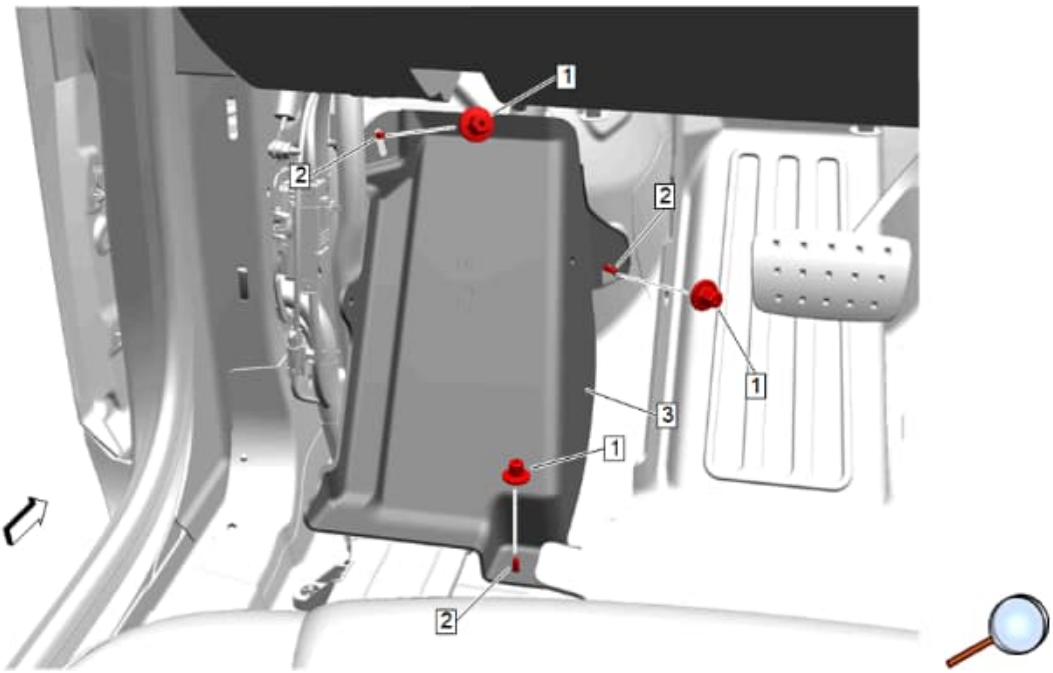

1. Reinstall floor carpet bracket (3) to studs (2) and secure with retainers (1).

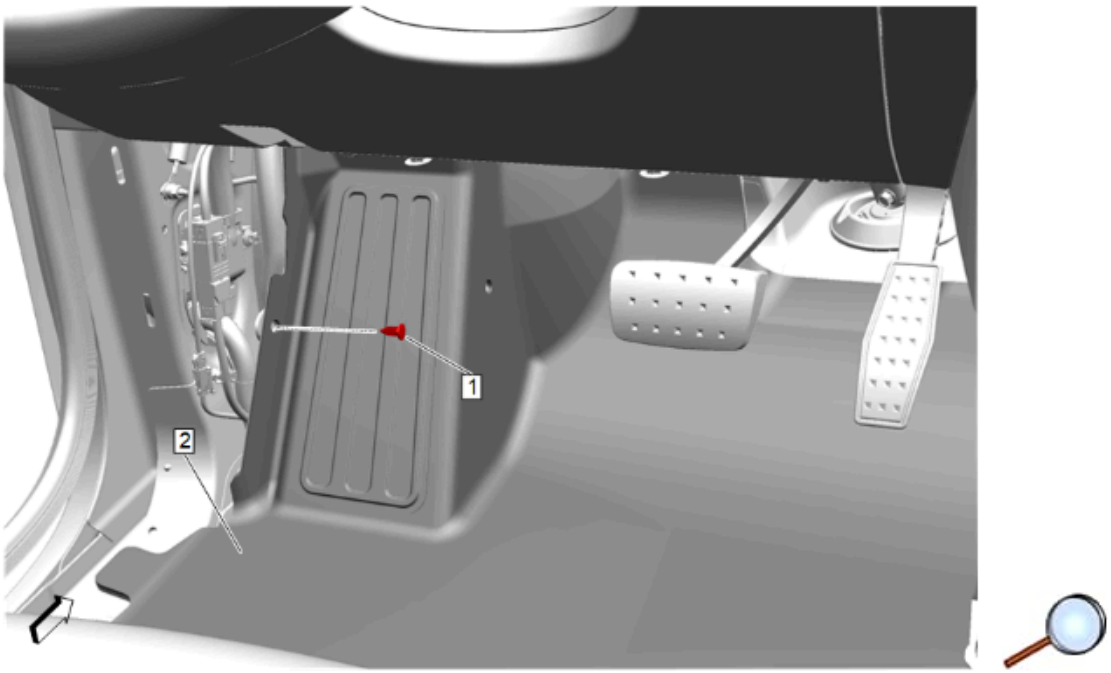

2. Pull back carpet and route the harness along the floor about 50 to 75mm below the top of the carpet from side to side. Reposition carpet and reinstall carpet retainer (1) on driver side.
3. Check clips on removed trim panels, replace clips if necessary.

   Note: Verify all wires are neatly secured, not pinched and not visible, tie straps should be used as necessary to keep harness secured and out of sight.
4. Tuck wire harness behind carpet and trim.
5. Reinstall the left and right front floor console extension panels. Refer to Front Floor Console Extension Panel Replacement in Vehicle Service Manual.
6. Reinstall the left and right front side door sill garnish molding . Refer to Front Side Door Sill Garnish Molding Replacement in Vehicle Service Manual.
7. Reposition and install the front door weather strip.
8. Reinstall the front floor mats.
9. Adjust the front seats to their original positions.
10. Close front doors.

© 2025 General Motors. All rights reserved.